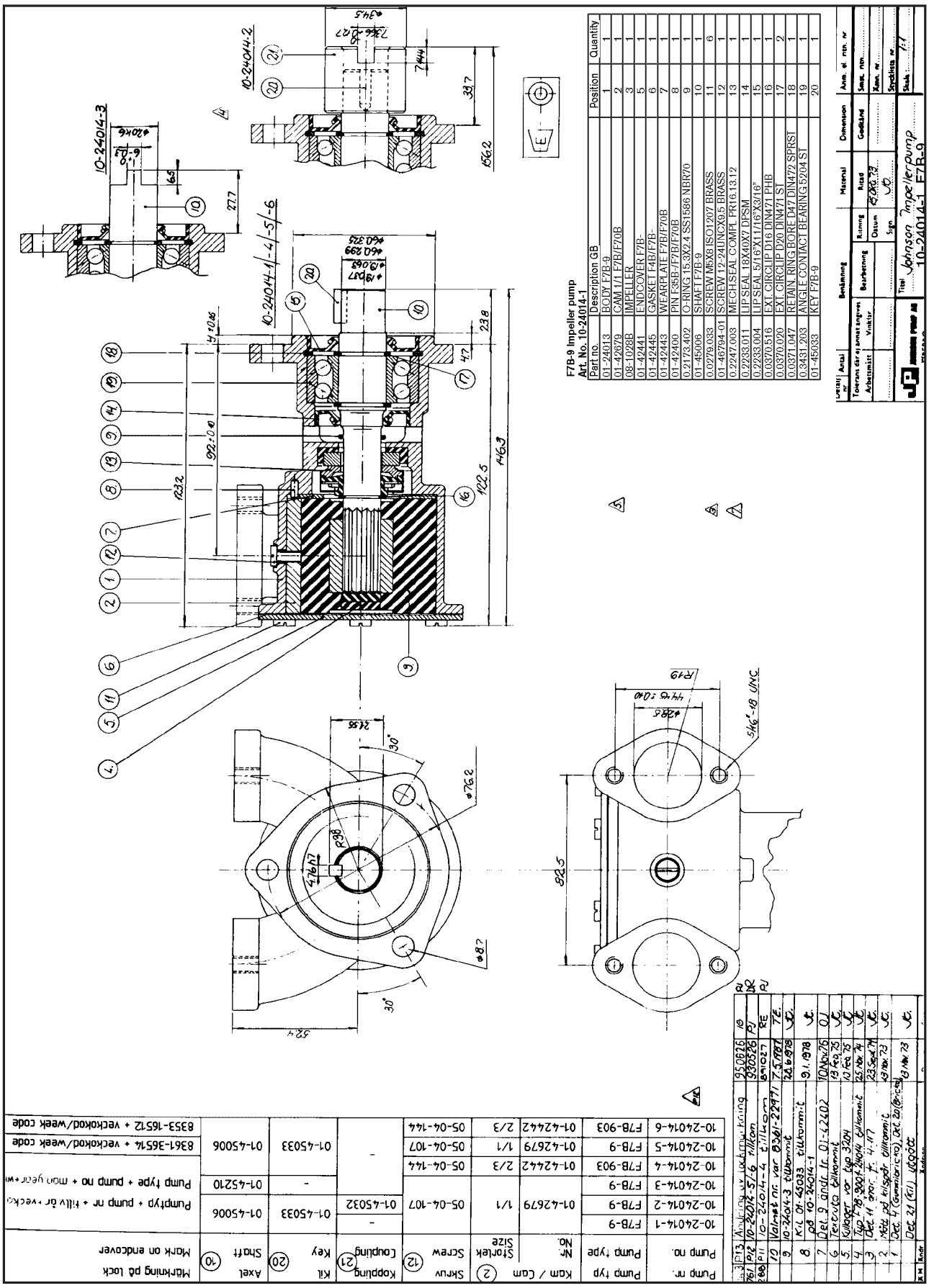10-24014 pump F7B-9