10-13283 pump F5B-9

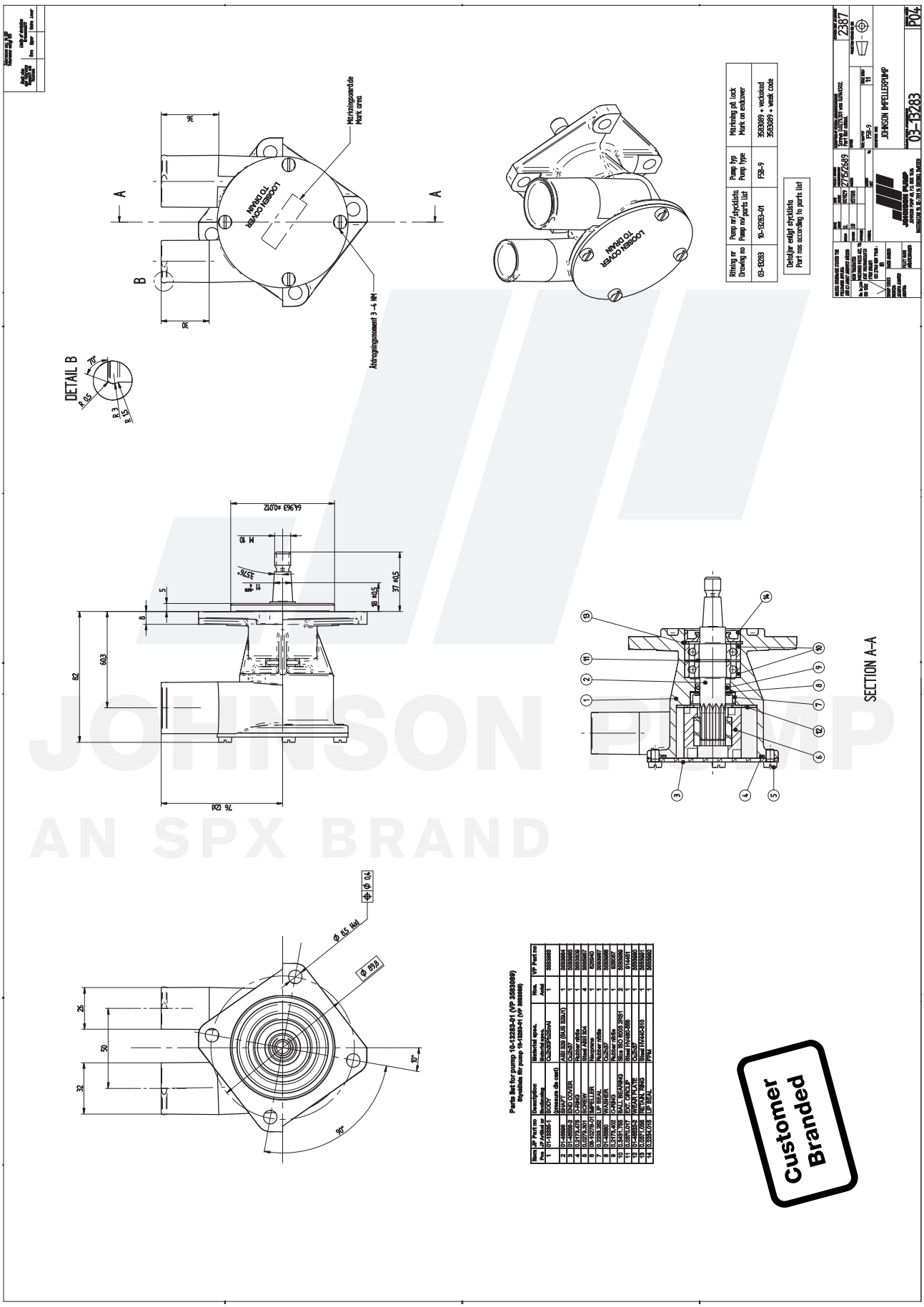

The product, i.e. concept, design and construction, is the property of SPX Johnson Pump Marine AB